ITEM NO.	PART NUMBER	DESCRIPTION	DESCRIPTION 2	QTY
11	FB-120-3500-2	BEAM, PULTRUDED STOCK	SERIES 3500 x 120 in, GRAY	2
2	TG0688-0040	BUSHING	11/16 in x 3 in	8
3	TG0813-0041	BUSHING	13/16 in x 3-15/16 in	8
4	TG0813-0042	BUSHING	13/16 in x 3 in	4
5	FOAM			2
6	EC30-0002-2	END CAP	SERIES 3000, GRAY	4
7	DM-0015	MOUNT ASSEMBLY, DEADEND	DE2	1
8	HB0750-0007	HEX BOLT	3/4 in - 10 x 10 in	2
9	LW0750-0001	LOCK WASHER	3/4 in	10
10	HN0750-0001	HEX NUT	3/4 in - 10	10
11	BK-0145	BRACKET, DE2		8
12	HB0750-0012	HEX BOLT	3/4 in - 10 x 7 in	8

PUPI®
www.pupicrossarms.com

REVISIONS				
ECO	REV.	DESCRIPTION	DATE	INITIALS
	2.1	REDRAWN IN SOLIDWORKS	2013-02-30	RAF
	2.2	REPLACE HB0750-0004 WITH HB0750-0012	2015-03-10	RAF
1731	3.0	UPDATE DRAWING FORMAT	2016-04-11	RAF
3166	3.1	ADD LOAD RATINGS	2017-04-19	RAF
	3.2	UPDATE LOAD NOTES	2020-03-27	TAL
6496	3.3	UPDATE DRAWING FORMAT	12/8/2023	AJH

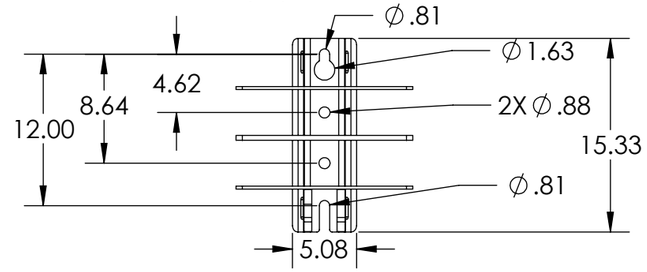

DETAIL -A-

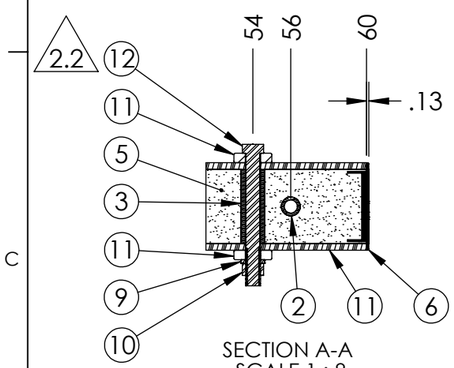

SECTION A-A
SCALE 1 : 8

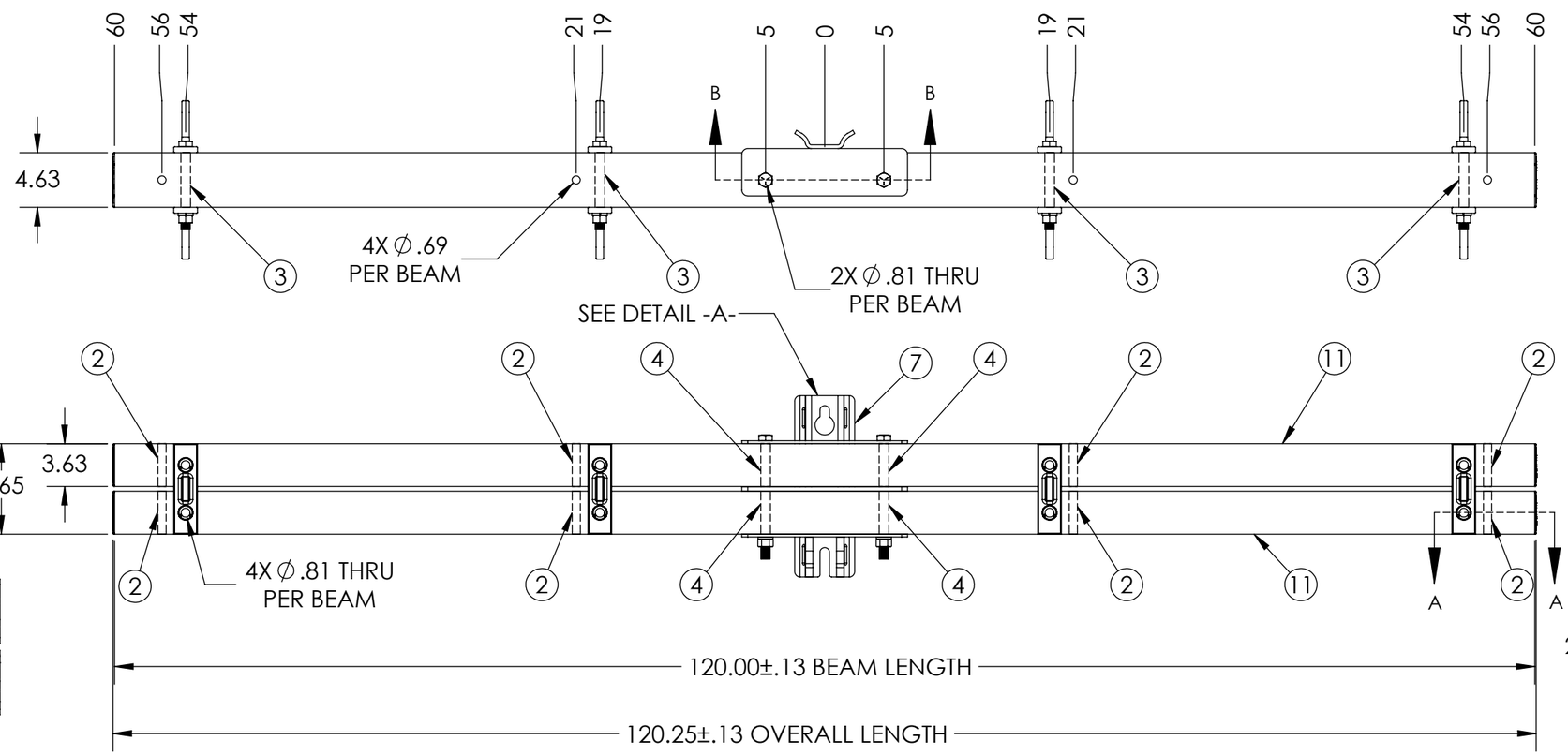

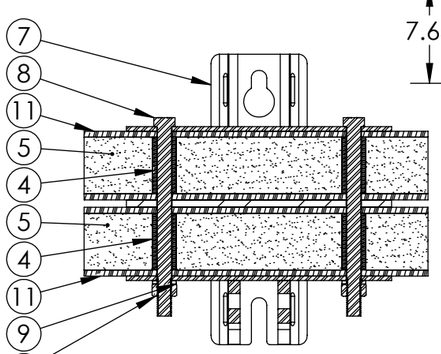

SECTION B-B
SCALE 1 : 8

NOTES:
1. CENTER OF MOUNT HOLE(S) TO HOLES TOLERANCE ±0.06
2. CALCULATED AVERAGE ULTIMATE VERTICAL LOAD = 8,500 LBS PER WIRE, 2 WIRES AT ±54
   = 6,500 LBS PER WIRE, 4 WIRES AT ±19 & ±54
3. CALCULATED AVERAGE ULTIMATE LONGITUDINAL LOAD = 18,500 LBS PER WIRE, 2 WIRES AT ±54
   = 18,500 LBS PER WIRE, 4 WIRES AT ±19 & ±54
4. GEOTEK RECOMMENDS MAXIMUM APPLIED LOAD PER WIRE DOES NOT EXCEED 50% OF THE AVERAGE ULTIMATE STRENGTH PER WIRE OF THE CROSSARM.

3.1 3.2

---UNLESS OTHERWISE SPECIFIED---
DIMENSIONS ARE IN INCHES
INTERPRET DIM AND TOL PER ASME Y14.5-2009
ANGULAR: MACH ±2°
BEND ±2°
ONE PLACE DECIMAL ±0.1
TWO PLACE DECIMAL ±0.02

PROPRIETARY AND CONFIDENTIAL
THE INFORMATION CONTAINED IN THIS DRAWING IS THE SOLE PROPERTY OF GEOTEK. ANY REPRODUCTION IN PART OR AS A WHOLE WITHOUT THE WRITTEN PERMISSION OF GEOTEK IS PROHIBITED.

CUSTOMER SIGNATURE: DATE:

STATE:	RELEASED	2023-12-13
DRAWN:	RAF	2013-02-20
CHECKED:	STK	2023-12-12
APPROVED:	AJH	2023-12-13

REPLACES:
DA3200-120E4-B9X

THIRD ANGLE PROJECTION
3.3

-REFERENCES-
pupicrossarms.com/warranty
geotek.com/termsandconditions

GEOTEK
A Whole New World of Composites
1421 SECOND AVE NW
STEWARTVILLE, MN 55976
(800) 533-1680
www.geotek.com

DESCRIPTION:
DEADEND ASSEMBLY, SERIES 3000
120 in, PUPI B9X
3.0

SIZE:	DWG. NO.	BEAM COLOR:	REV:
B	DA3020120E4B9X2	GRAY	3.3
SCALE: 1:12	WEIGHT: 151 LBS		SHEET 1 OF 1